3G Technology

Name :K.G Thilina Munasinghe
Register No :EP581
Department :Computing and Information System
University :Sabaragamuwa University

3G Technology

Definition of 3G

3G is the third generation of wireless technologies. It comes with enhancements over previous wireless technologies, like high-speed transmission, advanced multimedia access and global roaming. 3G is mostly used with mobile phones and handsets as a means to connect the phone to the Internet or other IP networks in order to make voice and video calls, to download and upload data and to surf the net.

Application services include wide-area wireless voice telephone, mobile Internet access, video calls and mobile TV, all in a mobile environment. To meet the IMT-2000 standards, a system is required to provide peak data rates of at least 200 Kbit/s. Recent 3G releases, often denoted 3.5G and 3.75G, also provide mobile broadband access of several Mbit/s to smartphones and mobile modems in laptop computers.

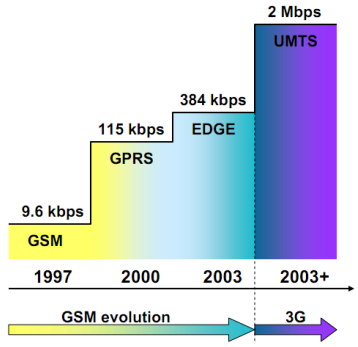

3G Technology

3G International Standardization

3G or 3rd generation mobile telecommunications is a generation of standards for mobile phones and mobile telecommunication services fulfilling the Mobile Telecommunications-2000 (IMT-2000) specifications by the Telecommunication Union.

- ITU (International Telecommunication Union)

  Radio standards and spectrum

- IMT-2000

  ITU's umbrella name for 3G which stands for

  International Mobile Telecommunications 2000

- National and regional standards bodies are

  collaborating in 3G partnership projects

  ARIB, TIA, TTA, TTC, CWTS. T1, ETSI - refer to

  reference slides at the end for names and links

- 3G Partnership Projects (3GPP & 3GPP2)

  Focused on evolution of access and core networks

3G Technology

What is 3G?

2.5G / 3G Adds IP Data No Changes for Voice Calls

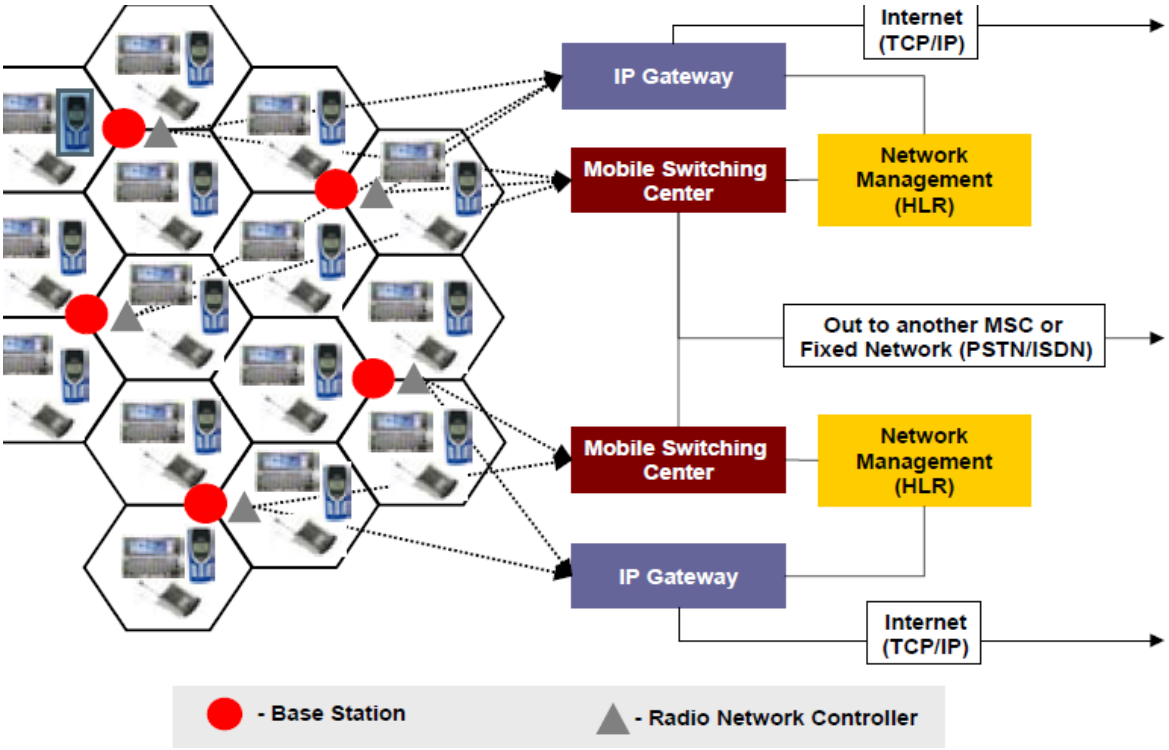

3G Partnership Project (3GPP)

3GPP defining migration from GSM to UMTS(W-CDMA)

Core network evolves from GSM-only to supportGSM, GPRS and new W-CDMA facilities

3GPP Release 99

Adds 3G radios

3GPP Release 4

Adds soft switch/ voice gateways and packet core

3GPP Release 5

First IP Multimedia Services (IMS) w/ SIP & QoS

3GPP Release 6

"All IP" network; contents of r6 still being defined

3G Technology

3GPP Release 99 Architecture

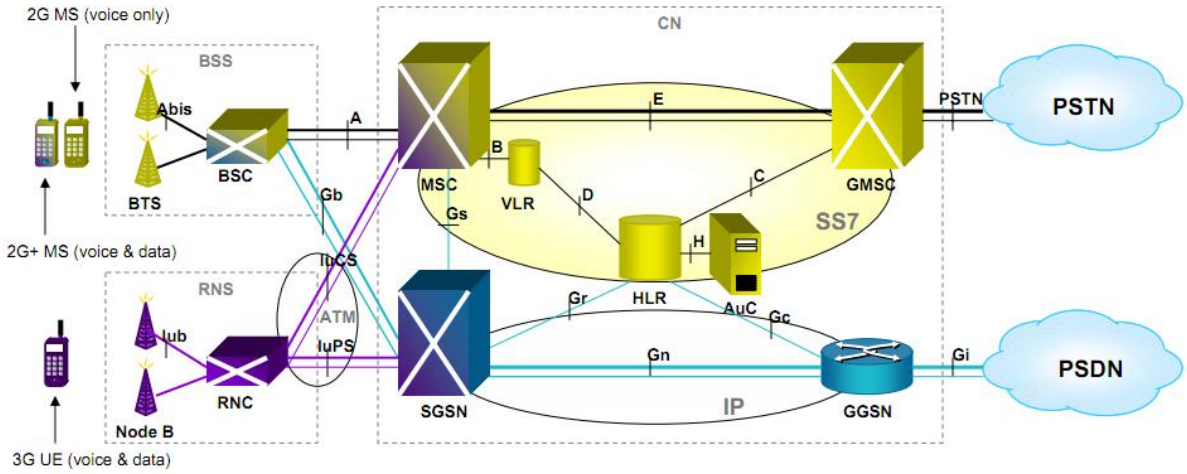

BSS — Base Station System
BTS — Base Transceiver Station
BSC — Base Station Controller

RNS — Radio Network System
RNC — Radio Network Controller

CN — Core Network
MSC — Mobile-service Switching Controller
VLR — Visitor Location Register
HLR — Home Location Register
AuC — Authentication Server
GMSC — Gateway MSC

SGSN — Serving GPRS Support Node
GGSN — Gateway GPRS Support Node

UMTS — Universal Mobile Telecommunication System

3G rel4 Architecture

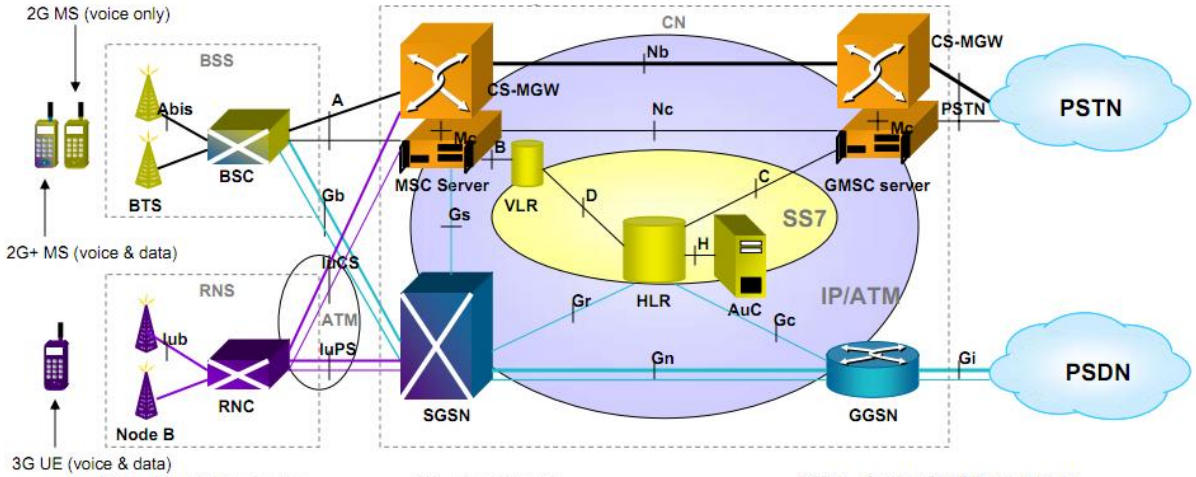

BSS — Base Station System
BTS — Base Transceiver Station
BSC — Base Station Controller

RNS — Radio Network System
RNC — Radio Network Controller

CN — Core Network
MSC — Mobile-service Switching Controller
VLR — Visitor Location Register
HLR — Home Location Register
AuC — Authentication Server
GMSC — Gateway MSC

SGSN — Serving GPRS Support Node
GGSN — Gateway GPRS Support Node

3G Technology

3G rel5 Architecture

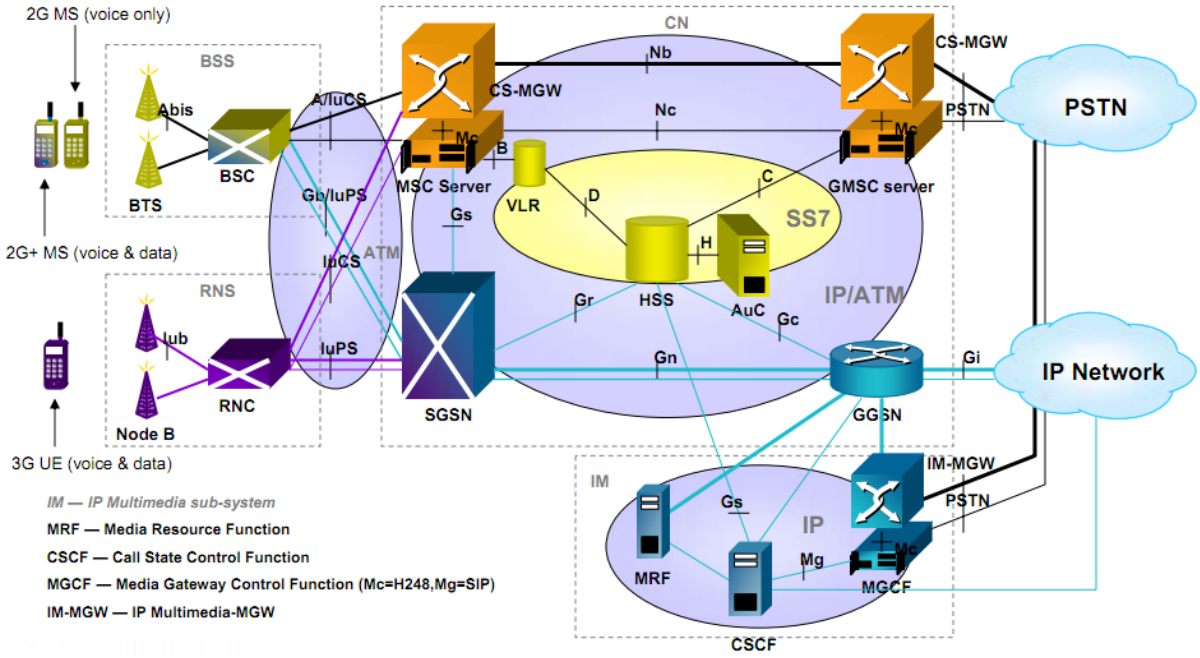

3GPP Rel.6 Objectives

IP Multimedia Services, phase 2

IMS messaging and group management

Wireless LAN interworking

Speech enabled services

Distributed speech recognition (DSR)

Number portability

Scope and definition in progress

3G Technology

3GPP2 Defines IS-41 Evolution

- 3rd Generation Partnership Project "Two"
- Separate organization, as 3GPP closely tied to GSM and UMTS
- Goal of ultimate merger (3GPP + 3GPP2) remains
- Evolution of IS-41 to "all IP" more direct but not any faster
- Skips ATM stage
- 1xRTT — IP packet support (like GPRS)
- 1xEVDV — adds soft switch/ voice gateways
- 3x — triples radio data rates

Mobile Services

- 3GPP Location Infrastructure
  - UE (User Entity)
    - May assist in position calculation
  - LMU (Location Measurement Unit)
    - distributed among cells
  - SMLC (Serving Mobile Location Center)
    - Standalone equipment (2G) or integrated into BSC (2G) or RNC (3G)
    - Leverages normal infrastructure for transport and resource management

3G Technology

LCS Architecture (3GPP)

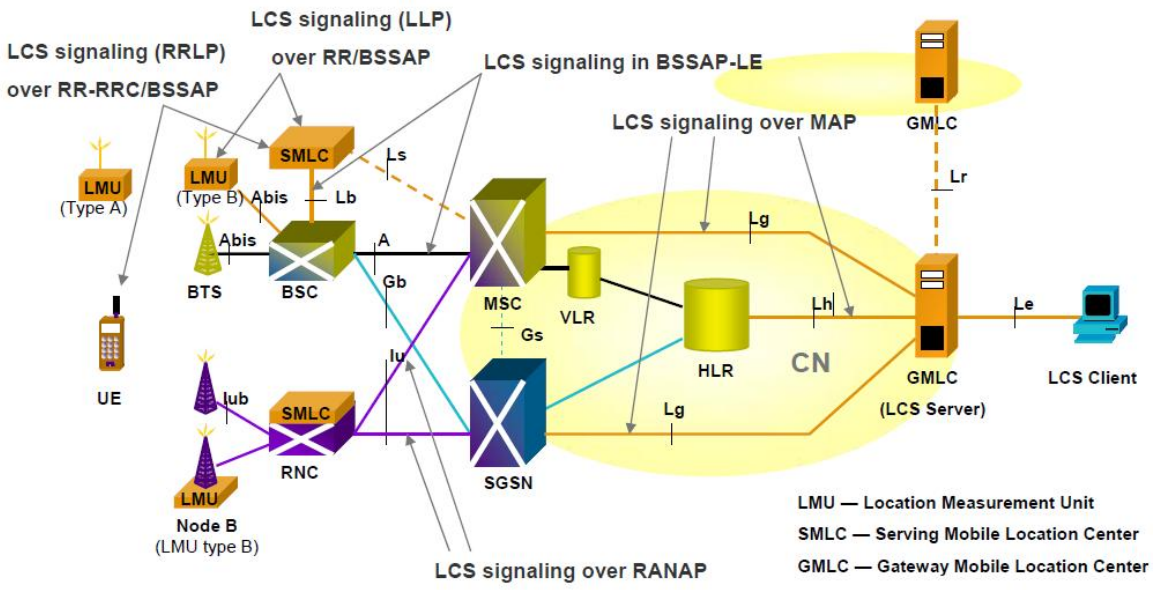

Location Request

MLP — Mobile Location Protocol

From Location Interop Forum

Based on HTTP/SSL/XML

Allows Internet clients to request location services

GMLC is the Location Server

Interrogates HLR to find visited MSC/SGSN

Roaming user can be located

UE can be idle, but not off !

Immediate or deferred result

3G Technology

3G-324M Video Services

Initial mobile video service uses 3G data bandwidth w/o IP multimedia infrastructure

Deployed by DoCoMo in Japan today

Leverage high speed circuit-switch data path

64 kbps H.324 video structure

MPEG 4 video coding

AMR audio coding

Supports video clips, video streaming and live video conversations

MS to MS

MS to Internet or ISDN with gateways

Common Technology Platform for 3G-324M Services

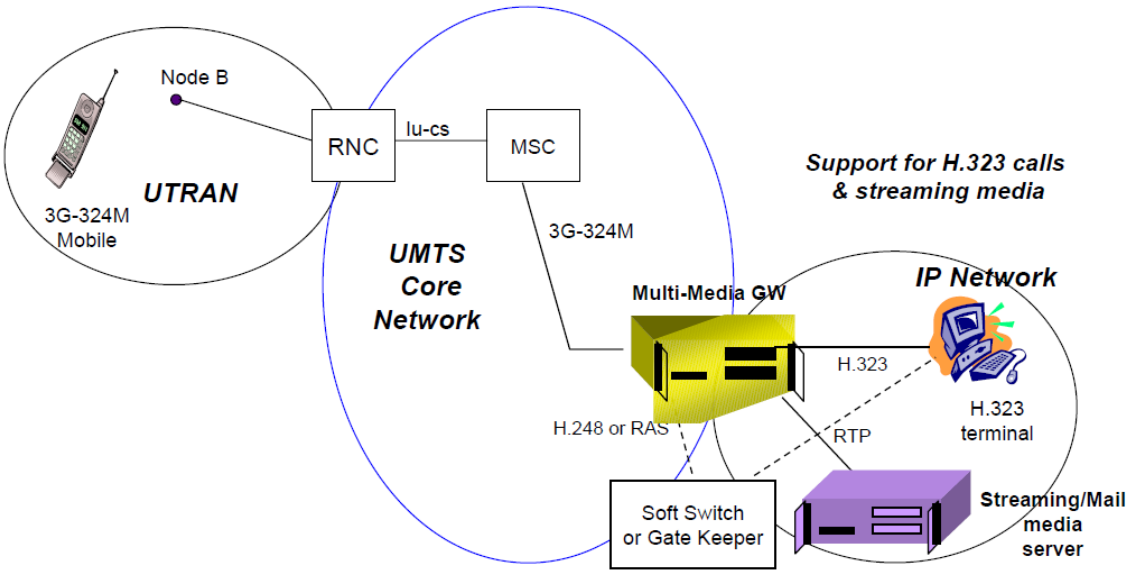

3G Technology

Gateway: 3G-324M toMPEG4 over RTP

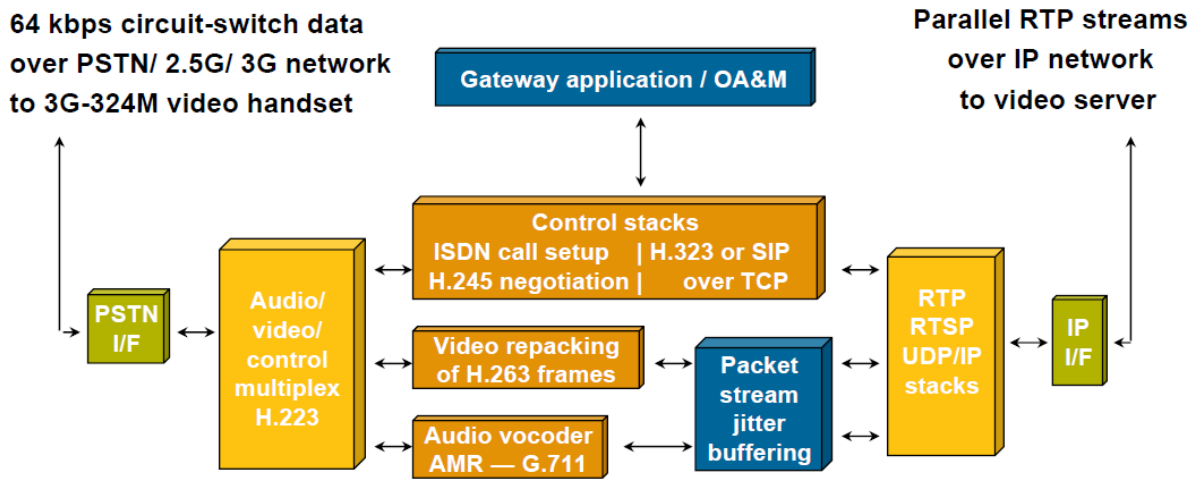

Video Messaging System for 3G-324M

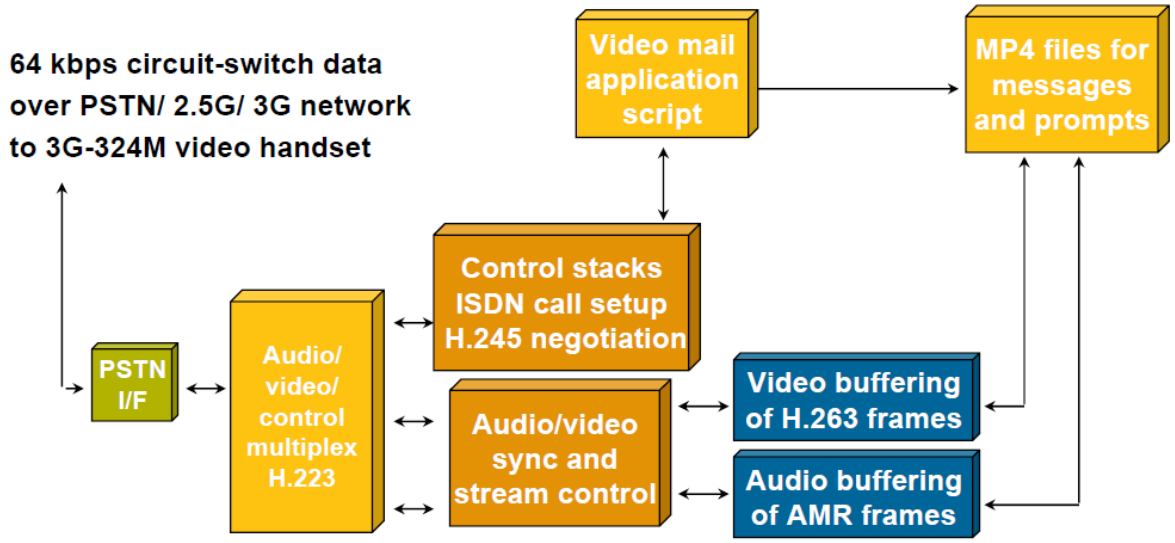

3G Technology

References

http://www.nmscommunications.com/file/3G_Tutorial.pdf

http://en.wikipedia.org/wiki/3g